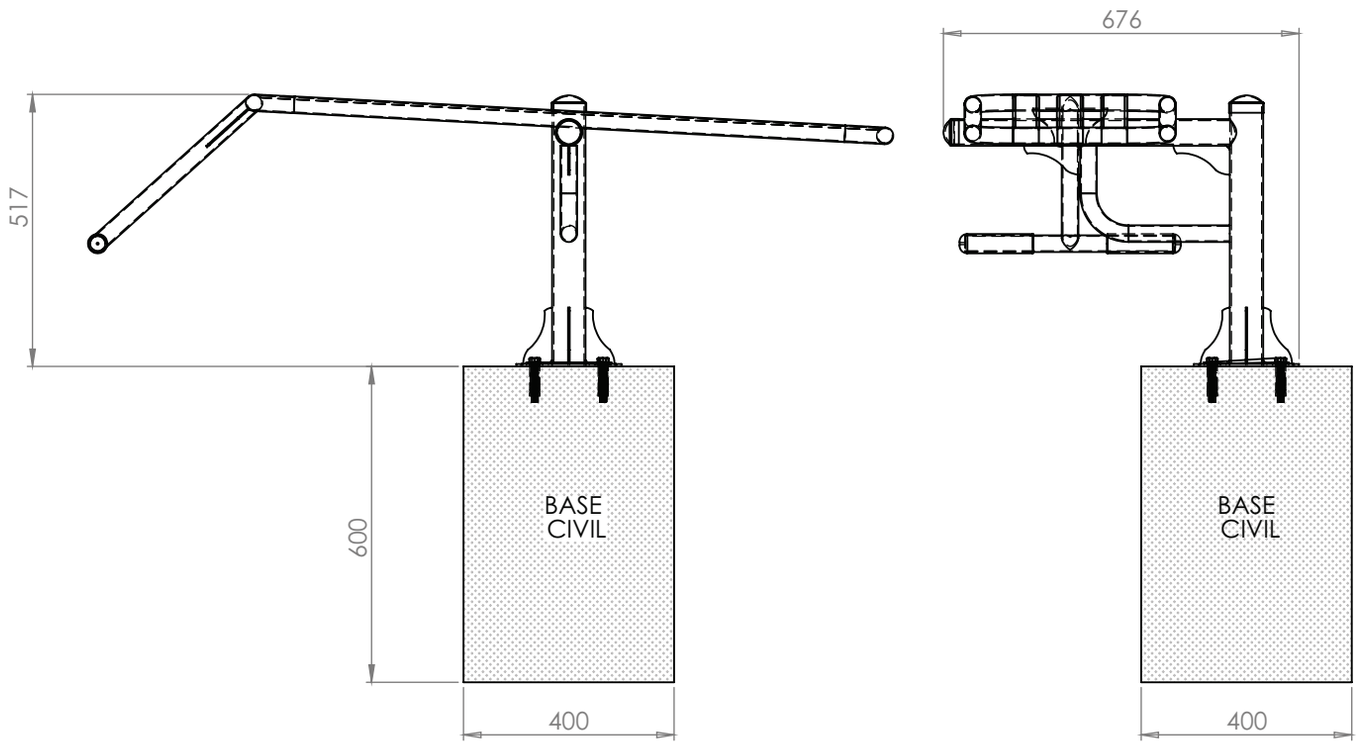
517
600
BASE
CIVIL
400
676
BASE
CIVIL
400

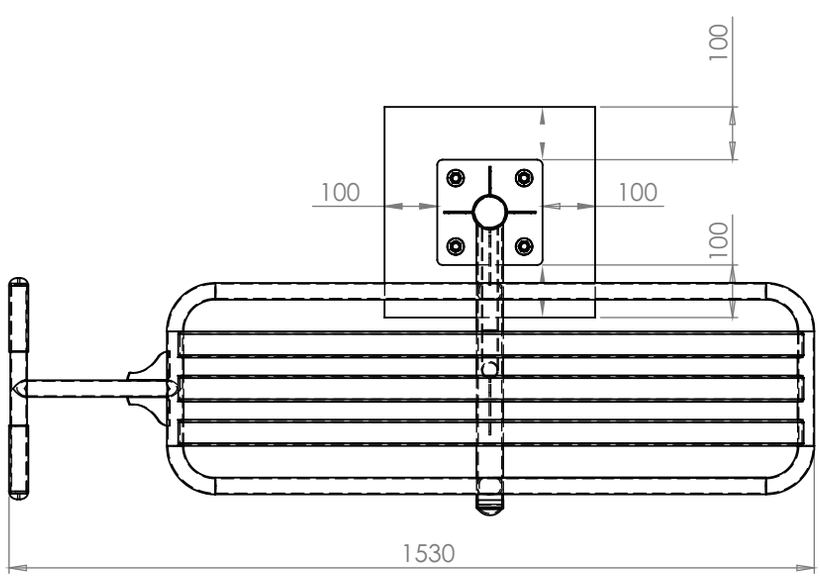
100
100
100
100
1530